INTERNATIONAL

SUNFISH

CLASS RULES

Effective: January 1, 2021

Incorporating Rules Changes approved by the ISCA World Council September 18, 2019

The Sunfish was designed in 1952 by Alcort, Inc. and was adopted as an international/recognised class in 1984.

Table of Contents

INTRODUCTION

This introduction only provides an informal background and the International Sunfish Class Rules proper begin on the next page.

Sunfish hulls, hull appendages, rigs and sails are manufacturing controlled.

Sunfish hulls, hull appendages, rigs and sails shall only be manufactured by LASERPERFORMANCE LLC – in the class rules referred to as the Builder. Equipment is required to comply with the International Sunfish Class Building Specification and is subject to World Sailing approved manufacturing control system.

Sunfish hulls, hull appendages, rigs and sails may, after having left the manufacturer, only be altered to the extent permitted in Section C of the class rules.

Owners and crews should be aware that compliance with rules in Section C is NOT checked as part of the certification process.

Rules regulating the use of equipment during a race are contained in Section C of these class rules, in ERS Part I and in the Racing Rules of Sailing.

PLEASE REMEMBER:

THESE RULES ARE **CLOSED CLASS RULES** WHERE IF IT DOES NOT SPECIFISCALLY SAY THAT YOU MAY – THEN YOU SHALL NOT.

COMPONENTS, AND THEIR USE, ARE DEFINED BY THEIR DESCRIPTION.

PART I – ADMINISTRATION

SECTION A – GENERAL

The Class Rules have been established to assure that the Sunfish sailboat, when raced, is a strict one-design boat where the true test is between sailors and not boats and equipment. No addition or alteration may be made to the Sunfish as supplied by the Builder except as is specifically authorized by these rules.

A.1 Language

A.1.1 The official language of the class is English and in case of dispute over translation the English text shall prevail.

A.1.2 The word "shall" is mandatory and the word "may" is permissive.

A.1.3 Except where used in headings, when a term is printed in "**bold**" the definition in the ERS applies and when a term is printed in "*italics*" the definition in the RRS applies.

A.2 Abbreviations

A.2.1 World Sailing International Sailing Federation

MNA World Sailing Member National Authority

ISCA International Sunfish Class Association

IHC In-house Certification

NCA National Class Association

ERS Equipment Rules of Sailing

RRS Racing Rules of Sailing

OSR Offshore Special Regulations

A.3 Authorities

A.3.1 The international authority of the class is World Sailing which shall co-operate with the ISCA in all matters concerning these **class rules**.

A.3.2 Notwithstanding anything contained herein, the **certification authority** has the authority to withdraw a **certificate** and shall do so on the request of the World Sailing.

A.3.2 Jurisdiction of the Class Rules is defined in the Constitution of the ISCA.

A.4 Administration of the Class

A.4.1 World Sailing has delegated its administrative functions of the class to MNAs. The MNA may delegate part or all of its functions, as stated in these **class rules**, to an NCA.

A.4.2 In countries where there is no MNA, or the MNA does not wish to administrate the class, its administrative functions as stated in these **class rules** shall be carried out by the ISCA which may delegate the administration to an NCA.

A.5 Class Rules Amendments

A.5.1 Amendments to these **class rules** are subject to the approval of the World Sailing in accordance with the World Sailing Regulations.

A.6 Class Rules Interpretation

A.6.1 Interpretation of **class rules** shall be made in accordance with the World Sailing Regulations.

A.7 International Class Fee and World Sailing Building Plaque

A.7.1 The Builder shall pay the International Class Fee.

A.7.2 World Sailing shall, after having received the International Class Fee for the hull, send the World Sailing Building Plaque to the Builder.

A.8 Sail Numbers

A.8.1 Sail numbers shall be issued by the NCA.

A.8.2 Sail numbers shall be issued in consecutive order starting at "1."

A.9 Hull Certification

A.9.1 Identification Marks. Sunfish sailboats built prior to 1970 have an identifying serial number on a metal plate attached just forward of the daggerboard trunk. Sunfish sailboats built after 1970 are identified by the serial number on the transom. Sunfish parts (daggerboard, rudder, tiller and spars) manufactured after September 1992 have a Class approved sticker attached. The Builder's mark on the hull and the sticker on equipment may be considered evidence that the parts are supplied by the Builder.

SECTION B – BOAT ELIGIBILITY

For a **boat** to be eligible for *racing*, it shall comply with the rules in this section.

B.1 Class Rules and Certification

B.1.1 The boat shall:

(a) be in compliance with the **class rules**.

(b) have valid **certification marks** as required

B.1.2 Unless specifically prohibited, any equipment that has ever been supplied by the Builder may be used on any boat.

PART II – REQUIREMENTS AND LIMITATIONS

The **crew** and the **boat** shall comply with the rules in Part II when *racing*. In case of conflict Section C shall prevail.

The rules in Part II are **closed class rules**. **Certification control** and **equipment inspection** shall be carried out in accordance with the ERS except where varied in this Part.

(The text "The rules in Part II are closed class rules" to be used if all Sections in Part II are closed class rules. Otherwise, it should be stated under "Rules" in each section whether the rules in that section are "closed class rules" or "open class rules".)

SECTION C – CONDITIONS FOR RACING

C.1 Rules

(a) The ERS Part I – Use of Equipment shall apply.

(b) RRS Appendix G.1.3(c) is changed see G.3

C.2 Crew

C.2.1 LIMITATIONS

(a) The **crew** shall consist of one person in Class sanctioned events and qualifiers as defined in the class notice.

(b) In events not covered by (a), nothing shall prohibit two persons from racing a Sunfish sailboat provided that both persons sail together for the entire event.

C.3 Personal Equipment

C.3.1 MANDATORY

(a) The boat shall be equipped with a **personal floatation device** for each crew member to the minimum standard ISO 12402-5 (level 50), or USCG Type III, or AUS PFD II or equivalent.

C.3.2 OPTIONAL

(a) **Wind indicators.** Any number of wind indicators of any type may be attached to the hull, deck, mast, spars, and/or sail

b) Clips, ties or bags may be used on the deck, in the cockpit, inside the hull, or around the mast to stow or secure personal equipment.

C.4 Advertising

C.4.1 LIMITATIONS

Advertising shall only be displayed in accordance the World Sailing Advertising Code. (See World Sailing Regulation 20)

C.5 Portable Equipment

C.5.1 OPTIONAL

(a) FOR USE

(1) Electronic or mechanical timing devices

(2) One magnetic analog or magnetic compass

(3) Wind indicators

(b) NOT FOR USE

(1) Electronic navigation devices

C.6 Boat

C.6.1 WEIGHT

	minimum
The weight of the **boat** in dry condition	54.9 kg 121 lbs

The weight shall be taken with the hull only excluding spars, **sails,** and all portable equipment as listed in C.5.

C.7 Hull

C.7.1 MODIFICATIONS, MAINTENANCE AND REPAIR

The following is permitted without the approval of the ISCA Technical Committee. Unless stated otherwise items mentioned in this section may be obtained from any manufacturer or supplier.

MODIFICATIONS

a) One single mainsheet block fitting of any type with or without an integral or attached jamming device may be mounted on the deck or cockpit lip.

b) One mainsheet cleat may be mounted on each side of the boat for the sole purpose of restraining the mainsheet. Spacers and/or wedges may be mounted under the cleats to improve alignment with the mainsheet.

c) Inspection ports may be installed on the deck or in the cockpit to provide access to the hull cavity provided that the essential watertight integrity of the hull is maintained. Removal of foam from the hull is prohibited. Inspection ports must remain closed while racing (as defined by RRS).

d) There are no restrictions as to the type of finish applied to the hull so long as the finish is applied in liquid form. Materials applied in solid or sheet form are specifically forbidden. The application of non-skid tape, foam or non-skid paint is allowed in current non-skid areas of the cockpit or deck. Modification of the hull to improve the shape or performance beyond the original is forbidden.

e) Deck fittings may be reinforced to prevent their pulling out.

f) A hiking strap making one traverse of the cockpit may be installed. The strap may be padded for comfort with any material and shock cords may be used in the attachment system.

g) A protective rubrail of any material may be mounted around the periphery of the deck. The rubrail cross section shall not exceed one inch (2.54 cm) in diameter.

h) Sanding and smoothing of the daggerboard trunk is permitted. Anti-chafe material may be added in the daggerboard trunk solely to protect the construction and finish of the daggerboard. Any material may be added to the sides of the daggerboard trunk to improve the fit of the daggerboard. There shall be at least 2 inches without the added material on each side of the trunk from top to bottom. Material shall not protrude above the deck or below the hull. Gaskets or flaps are prohibited. No changes or additions may be made that create a jibing board.

i) Non-recording magnetic analog or digital compasses or stopwatches may be mounted on the deck so long as the watertight integrity of the hull is maintained.

j) A separate line for the sole use as a painter (bowline) may be added.

C.8 Hull Appendages

C.8.1 LIMITATIONS

Only one daggerboard and one rudder blade shall be used during an event except when a hull appendage has been lost or damaged beyond repair.

C.8.1 DAGGERBOARD

C.8.1.2 MODIFICATIONS, MAINTENANCE AND REPAIR

The following is permitted without the approval of the ISCA Technical Committee. Unless stated otherwise items mentioned in this section may be obtained from any manufacturer or supplier.

MODIFICATIONS

a) A daggerboard retaining device of any type may be used for the purpose of vertically positioning the daggerboard providing Rule C.8.2.1 c) is not violated.

b) A handle may be attached to the top of the daggerboards (shown in Rule E.3.2 Figures 1 & 3) for the sole purpose of raising and lowering the daggerboard.

c) Minor adjustments may be made to the daggerboards (shown in Rule E.3.2) by way of sharpening the trailing edge, rounding the leading edge, refinishing or repairing damage provided that the daggerboard has dimensions in accordance with the measurement diagram. Refinishing may include covering the daggerboard with fiberglass and/or resin.

d) Modifications may be made to strengthen daggerboard handles provided the distance from the underside of the handles to the end of the board does not exceed 40 ¼ inches. This applies to the daggerboards shown in Rule E.3.2.

e) Repair and preventive maintenance work is allowed on the daggerboard provided the dimensions as shown in Rule E.3.2 are maintained. Covering the daggerboard with fiberglass is prohibited.

C.8.2 RUDDER

C.8.2.1 USE

The rudder blade shall be in its fully lowered position. However, for races sailed in shallow water the sailing instructions may prescribe that this rule shall not apply.

C.8.2.2 MODIFICATIONS, MAINTENANCE AND REPAIR

The following is permitted without the approval of the ISCA Technical Committee. Unless stated otherwise items mentioned in this section may be obtained from any manufacturer or supplier.

a) Subject to Rule C.8.2.2(b), nothing herein shall preclude minor adjustments to the rudder by way of sharpening the trailing edge, rounding the leading edge, refinishing or repairing damage provided that the rudder has dimensions in accordance with the measurement diagram. Refinishing may include covering the rudder with fiberglass and/or resin.

b) The rudder may be reinforced with metal rods, screws or bolts to prevent splitting. Holes in the rudder and the rudder head may be strengthened with

bushings. Bolts and nuts may be changed. Washers may be added. Plastic pads may be added to the rudder head to reduce play.

DIMENSIONS

ORIGINAL DESIGN.....

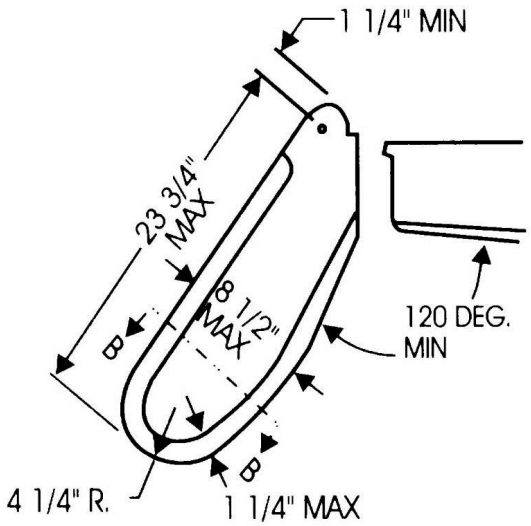

Figure 2

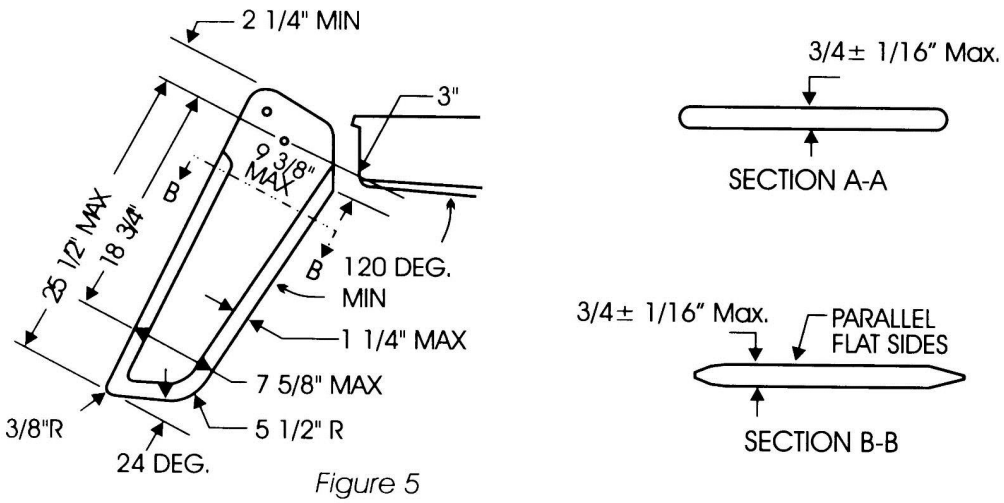

Figure 5

Rudder c. 1971

C.8.3 TILLER

C.8.1 MODIFICATIONS, MAINTENANCE AND REPAIR

Any material may be added to the tiller for a maximum length of 16 inches to prevent chafing from contact with the bridle.

The tiller extension may be of any length, diameter, or size, either fixed or telescoping, attached in any manner including a universal joint, provided it is used solely as an extension of the tiller.

An additional Builder-supplied tiller strap may be added to each side of the tiller.

Bushings may be installed in the holes in the tiller straps. The plastic washers between the rudder and the tiller straps may be replaced by plastic pads attached to the inner surfaces of the tiller straps to reduce play and improve rudder reliability.

C.9 RIG

C.9.1 LIMITATIONS

One set of spars and standing rigging shall be used during an event, except when an item has been lost or damaged, and the race committee has approved the substitution.

C.9.2 MODIFICATIONS, MAINTENANCE AND REPAIR

The following is permitted without the approval of the ISCA Technical Committee. Unless stated otherwise items mentioned in this section may be obtained from any manufacturer or supplier.

a) The location of the gooseneck fitting may be adjusted.
b) The gooseneck bolt may be replaced with any type of bolt or quick adjuster.
c) The location of the boom blocks may be changed.
d) Attachment of boom loops mounted between the boom blocks, made of flexible material or that swing out of the way, is permitted for the sole purpose of holding the mainsheet along the boom.
e) The boom block eye straps may be replaced with any type of straps.
f) Any sheets or lines may be substituted for those supplied by the Builder, but no additional sheets or lines, unless specifically authorized, shall be added. Sheets or lines in whole or in part of wire are prohibited except in C.9.2 p). Each sheet must be one continuous length of line of uniform diameter.
g) The mainsheet may be any length and diameter. A class-supplied running block attached to the bridle may be used to allow an additional purchase on the mainsheet. When using this additional purchase, the end of the mainsheet shall be tied to the eyestrap of the aft boom block. The trigger clip may be removed or replaced with an alternative clip of approximately the same size. A small running block may be used on the bridle with or without the clip.

h) One line may be tied on the mast to facilitate adjustment of halyard tension. Lines may not be led internally in the spars. Any number of purchases may be used. It is permissible to use thimbles, or similar devices without moving parts, tied into the purchase loops to prevent chafing of the lines. This device shall not be attached to the mast.
i) Up to four lines and two cleats may be installed on the spars to facilitate adjustment of tension on foot and luff of the sail. Only one adjustable outhaul/inhaul is allowed for each spar. Lines may not be led internally in the spars. Any number of purchases may be used. These adjustable outhauls may be led through flexible fairleads attached to the spars without hardware. It is permissible to use a thimble, or similar device without moving parts, tied into the purchase loops to prevent chafing of adjustable outhauls. This device shall not be attached to the boom.
j) A rig to lower the point at which the upper spar lies against the mast (known as the "Jens Hookansen Rig") may be tied with an extra piece of line used solely for that purpose. The rig must be tied in such a way that the sail can be lowered quickly and easily by releasing the halyard(s).
k) Tape, plastic or similar material may be used in the following locations:
    a. to fill the gap between the mast and the mast step.
    b. on the upper spar to keep the halyard from slipping.
    c. on the boom in the area where the gooseneck is attached.
    d. on the gooseneck or mast to prevent chafing between these parts.
l) One cleat of any type may be installed on the mast not more than four (4') feet from the base, for cleating the line used to tie the "Jens Rig" (Ref. Rule C.9.1 j). It may also be used to cleat the halyard. If utilized, there must be some means to securely attach the rig to the hull using the end of the halyard.
m) Removal of any or all cork from the mast is allowed. Additionally, a drain hole may be drilled in the mast base cap.
n) The halyard(s) may be led down the mast on either side of the sail.
o) Outhaul lines may be replaced with a line of any type and any length for the sole purpose of making a more easily adjustable outhaul / inhaul for each boom. (See rule C.9.2.f)
p) Either one or both of the following bridles may be installed:
    a. The wire bridle with a loop in the center, supplied by the Builder on older boats. The loop may be taped to one side to permit the mainsheet to slide the full length of the bridle.
    b. The wire bridle without a loop in the center supplied by the Builder. The effective length of such bridle shall be 31 inches±1 inch (787.4mm ±25.4mm) measured from eyestrap to eyestrap. The rope bridle, which was previously supplied by the Builder, is prohibited.

C.10 SAILS

C.10.1 LIMITATIONS

Not more than one mainsail shall be used during an event except when a **sail** has been lost or damaged beyond repair.

C.10.2 MODIFICATIONS, MAINTENANCE AND REPAIR

The following is permitted without the approval of the ISCA Technical Committee.

(a) **Sails** may be repaired providing that the shape is not altered.

(b) **Sails** shall not be altered in any way except as permitted by these **class rules**.

(b) Routine maintenance is permitted without re-measurement and re-**certification**.

SECTION D – HULL AND DECK

D.1 The hull and deck shall be built from approved tooling manufactured and supplied by the builder and shall be constructed in accordance with the manufacturing specifications.

SECTION E - MANUFACTURERS

E.1 Hull appendages, Rudder stock and Rudder gantry shall only be manufactured by Licensed Manufacturers.

E.2 Component Parts

(a) Daggerboard

(b) Rudder

(c) Tiller

(d) Tiller extension/hiking stick

E.3 Daggerboard

E.3.1 The daggerboard shall only be supplied by the Builder.

E.3.2 Daggerboard dimensions

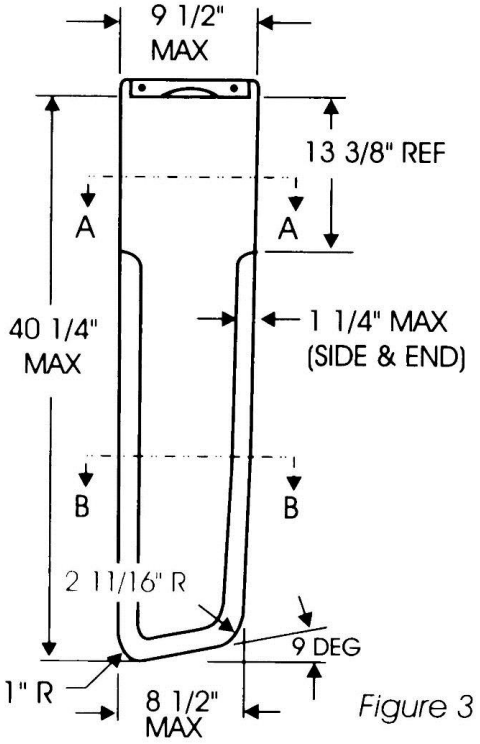

Figure 3

Daggerboard c. 1980

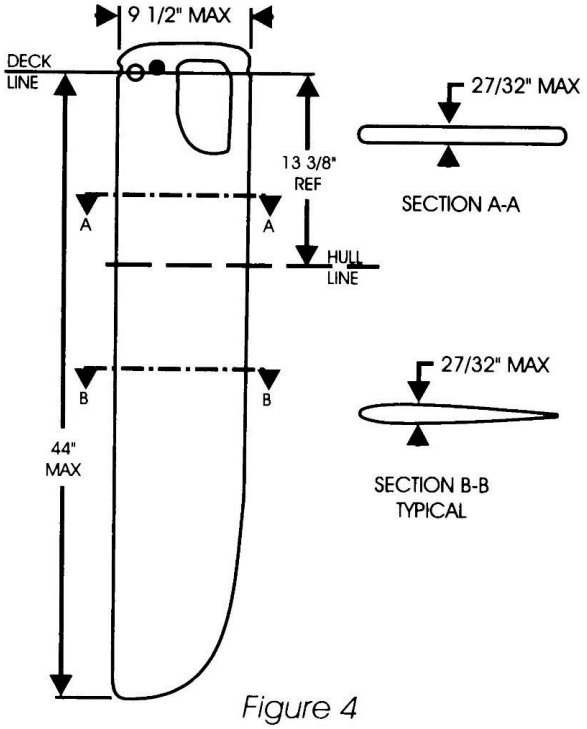

Figure 4

Daggerboard c. 1993

E.4 Rudder and tiller

E.4.1 The rudder and rudder head shall only be supplied by the Builder.

E 4.2 The tiller shall be supplied only by the builder.

E.4.3 Tiller dimensions

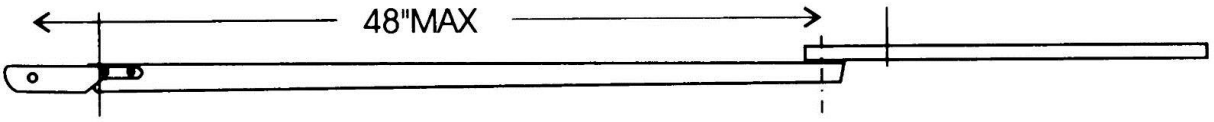

SECTION F - RIG

F.1.1 The spars and mast and all attached fittings shall be supplied only by the Builder.

F.1.2 Mast dimensions

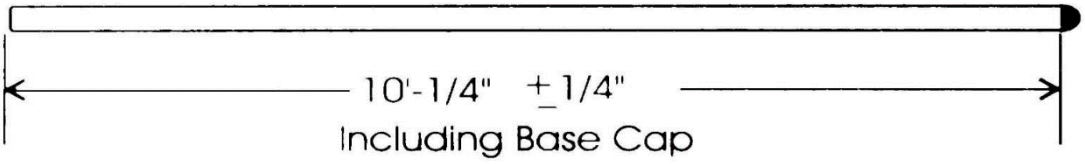

F.1.3 Boom dimensions

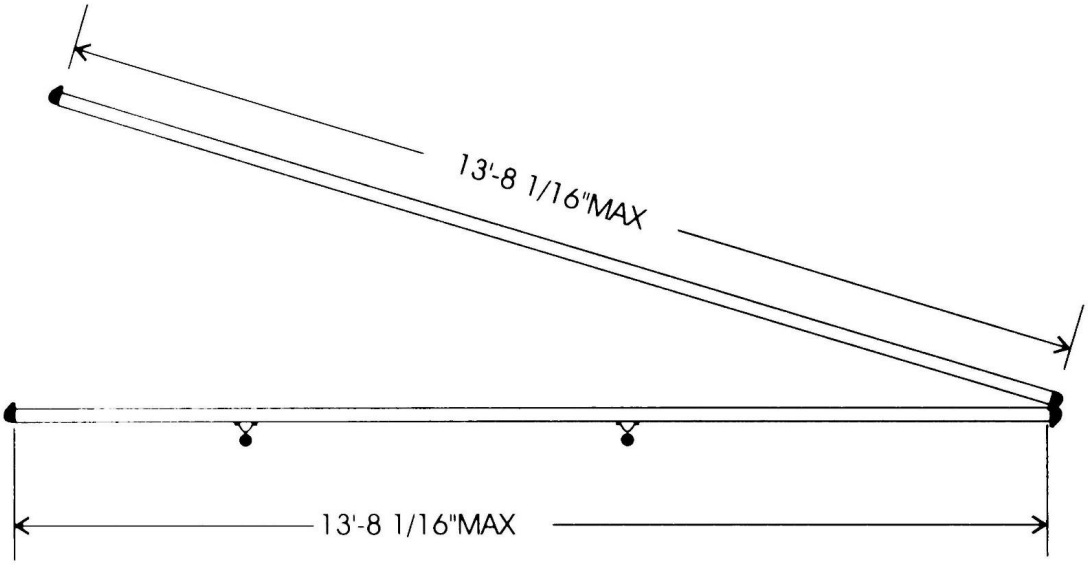

SECTION G - SAIL

G.1 The sail shall be supplied only by the Builder.

G.1.1 One rectangular window shall be installed in the sail by the manufacturer so long as the shape or size of the sail is not altered. The total area of the window shall not exceed 600 sq. inches (3871 sq cm).

G.1.2 The sail shall not be attached to the spars by anything other than line and/or Builder supplied sail clips.

G.1.3 The class emblem shall be glued, sewn or silk screened on the sail.

G.2 Sail Numbers. The objective of ISCA is for members to use sail numbers assigned only by the National Sunfish Class Association (NSCA) and to require uniformity so that numbers are easy to read.

a) Assignment. The NSCA shall assign to each member of the Class a unique sail number which shall be displayed on each side of the sail.
b) For sails purchased after January 1, 2015, the sail numbers shall comply with RRS Appendix G.1. For all other sails, the numbers shall comply with RRS Appendix G.1 or alternatively they shall comply with the following:
c) Color. For white sails, numbers shall be dark and dense, preferably black. White numbers shall be used on dark sails. All digits on a sail must be the same color.

d) Placement. Placement shall be as shown on the Measurement Diagram for the sail. Sail numbers shall be placed parallel to and 1±¼ inches (25±6mm) from the center of the seam just below the Sunfish emblem, centered under the emblem, with the number on the starboard side placed above the seam and the number on the port side placed below the seam. Space between adjoining numbers shall be a minimum of 2 3/8” (60mm).
e) Effectivity. These requirements shall be strictly enforced at all World Championship qualifying regattas beginning with new sails put into use after 1/1/96.

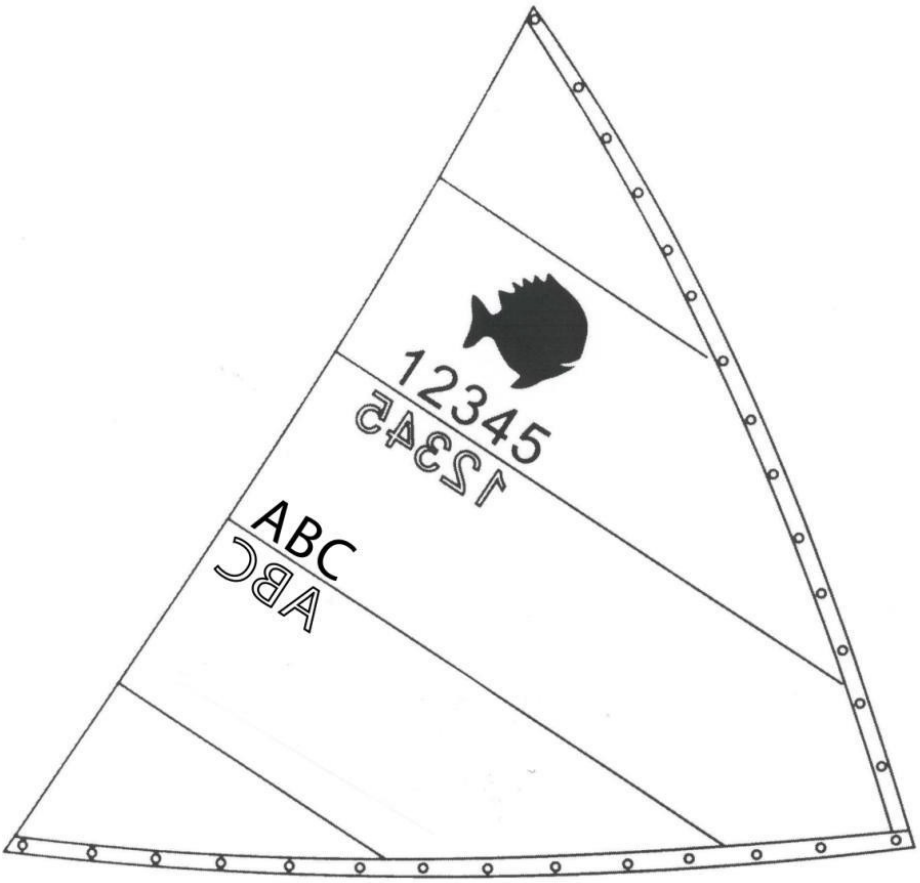

G.3 National Letters when required shall be applied as shown on the Measurement Diagrams for the sail. The National Letters on the starboard side shall be placed in the third panel from the bottom of the sail. The bottom of the letters on the starboard side shall be parallel to the seam below the panel, and 1+/- 1/4” (25+/- 6mm) from the center of that seam. The letter closest to the leach shall be a minimum of 2 3/8” (60mm) and a maximum of 4 ¾” (120mm) from the leach. The letters on the port side shall be placed in the second panel from the bottom of the sail. The top of the letters on the port side shall be parallel to the seam above the panel, and 1+/- ¼” (25+/- 6mm) from the center of that seam. The letter closest to the leach shall be a minimum of 2 3/8” (60mm) and a maximum of 4 ¾” (120mm) from the leach. This changes RRS G.1.3(c)

Effective Date: January 1, 2021

Published Date:

Previous issues: January 1, 2015

© *World Sailing 2020*